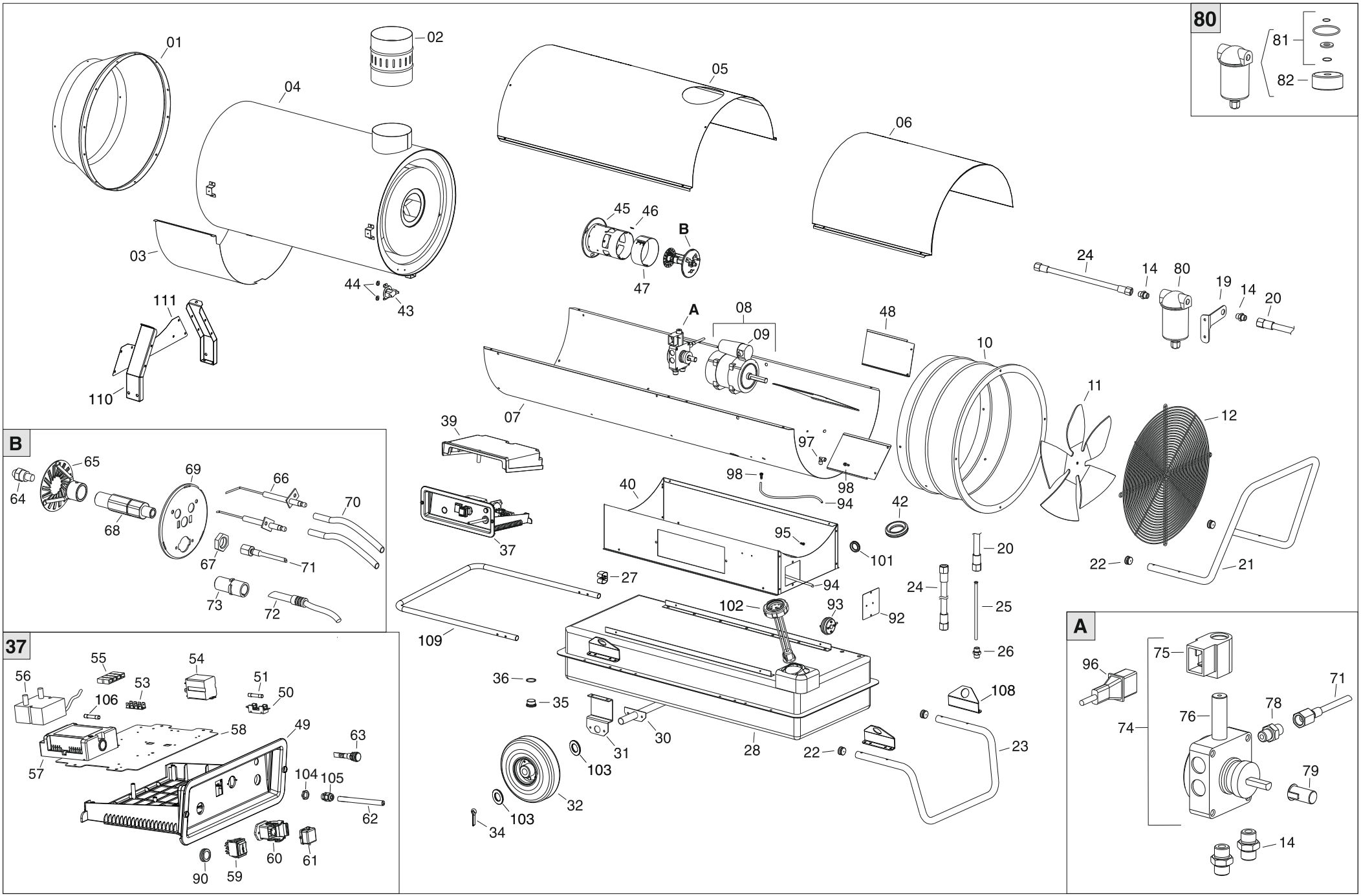
80
81
82
01
02
04
05
06
03
45
46
B
47
44
43
111
110
A
08
09
48
24
14
80
19
14
20
10
11
12
07
39
97
98
98
94
40
42
95
101
20
22
21
37
27
94
24
25
102
93
92
109
26
36
35
108
31
30
28
22
23
103
32
103
34
B
65
64
69
66
70
68
67
71
73
72
37
55
54
56
53
51
50
106
58
49
63
57
104
105
62
60
61
90
59
A
75
96
71
78
76
74
79
14

PL 01/23			Da N.° serie	De No. Serie	Von Masch. Nr.	From S/N
			21307501			
POS	**P/N**	**LEGENDA**	**DESCRIZIONE**	**DESCRIPTION**	**BESCHREIBUNG**	**DESCRIPTION**
01	G06114-3001	-	Cono diffusore	Embout conique	Ausblaskonus	Outlet cone
02	G06077	Ø 150	Raccordo camino	Raccord cheminée	Schornsteinanschluss	Chimney fitting
03	G06175	-	Pannello isolante	Panneau d'isolation	Isolierplatte	Insulating panel
04	G06177-09	-	Camera di combustione	Chambre de combustion	Brennkammer	Combustion chamber
05	G06413-3001	-	Carrozzeria superiore	Carrosserie sup.	Karosserie Oberteil	Upper body
06	G06122-3001	-	Pannello ispezione	Porte visite	Inspektionsklappe	Inspection panel
07	G06578-3001	-	Carrozzeria inferiore	Carrosserie Inf.	Karosserie Unterteil	Lower body
AACO						
08	E10704-110	750 W - 120V - 60Hz	Motore	Moteur	Motor	Motor
09	E11249	80 µF	Condensatore	Condensateur	Kondensator	Capacitor
SIMEL						
08	E10772	750 W - 120V - 60Hz	Motore	Moteur	Motor	Motor
09	E10772-1	100 µF	Condensatore	Condensateur	Kondensator	Capacitor
10	G06126-3001	-	Convogliatore aria	Air collecteur	Luftkollektor	Air conveyor
11	T10261	Ø 500 - 23°	Ventola	Ventilateur	Lüfter	Fan
12	P30129	-	Griglia aspirazione	Grille aspiration	Ansauggitter	Inlet grill
14	I20104	1/4"M - 1/4"M	Raccordo ferro	Raccord fer	Anschluss, Eisen	Iron fitting
19	G06104-9005	-	Staffa supporto filtro	Étrier support filtre	Trägerbügel Filter	Filter support bracket
20	EC0221201	L = 260mm - 1/4" FF	Tubo gasolio flessibile	Flexible fuel	Flexibler Heizölschlauch	Flex diesel pipe
21	P20176-9005	-	Maniglia	Poignée	Griff	Handle
22	C30355	Ø25	Tappo copritubo	Bouchon tuyau	Schlauchstöpsel	Pipe cap
23	P20177-9005	-	Piede	Support	Stütze	Support
24	EC0221203	L = 580mm - 1/4" FF	Tubo gasolio flessibile	Flexible fuel	Flexibler Heizölschlauch	Flex diesel pipe
25	I30696	L = 220mm	Pescante	Tuyau d'aspiration	Ansaugrohr	Suction pipe
26	I30737	1/4" M - M12x1,75 M	Raccordo ottone	Raccord laiton	Messingfitting	Brass fitting
27	M20429	-	Fermacavo	Protection cable	Kabeltülle	Cable protection
28	G06128-9005	105 l	Serbatoio gasolio	Réservoir fuel	Heizölbehälter	Fuel tank
30	G06465-9005	Ø 25	Assale	Essieu	Achse	Wheel axle
31	G06106-9005	-	Staffa supporto assale	Etrier support essieu	Trägerbügel Achse	Wheels axle support bracket
32	C10556	Ø 260 - Ø 26	Ruota	Roue	Rad	Wheel
34	M20507	D 5 x 70	Copiglia	Goupille	Splint	Cotter pin
35	I25020	M16x1,5	Tappo scarico serbatoio	Bouchon de vidange réservoir	Behälterablassstopfen	Drain cap
36	C30375	Ø13,95 x 2,62	Guarnizione OR	Anneau O'R	O-Ring	O-ring
37	G00248	-	Quadro elettrico	Coffret éléctrique	Schaltkasten	El. control box
39	P50127	-	Copertura quadro elettrico	Couverture coffret électrique	Abdeckung Schalttafel	Control box cover
40	G06474-3001	-	Basamento	Base	Sockel	Base
42	C30372	Ø 25,4mm - Ø34,9 mm	Passacavo	Protection cable	Kabeldurchgang	Cable protection
43	E50102	-	Termostato di sicurezza	Thermostat de sécurité	Sichereitsthermostat	Safety thermostat
44	M20107	Ø5 x Ø15 x 1,5	Rondella	Rondelle	Unterlegscheibe	Washer
45	G06266	-	Boccaglio	Gueulard	Brennerrohr	Blast tube
46	E20671	6,3x0,8 mm	Morsettiera	Barrette de connection	Klemmenleiste	Terminal board
47	G06183	-	Serranda regolazione aria	Tablier réglage air	Luftregelklappe	Air adjustment shutter
48	G06394	-	Convogliatore aria	Air collecteur	Luftkollektor	Air conveyor

PL 01/23			Da N.° serie	De No. Serie	Von Masch. Nr.	From S/N
			21307501			
POS	**P/N**	**LEGENDA**	**DESCRIZIONE**	**DESCRIPTION**	**BESCHREIBUNG**	**DESCRIPTION**
49	G06153	-	Pannello quadro elettrico	Panneau du coffret éléctrique	Schaltkastenplatte	El. control box panel
50	E20508	6 x 32	Portafusibile	Porte fusible	Sicherungshalter	Fuse holder
51	E10313	6x30 - 20A - T	Fusibile	Fusible	Sicherung	Fuse
53	E20319	-	Morsettiera per cavi terra	Barrette de connection	Klemmenleiste für Erdungskabel	Ground terminal board
54	E11125	65.31 - 120V	Relè	Relais	Relais	Relay
55	E20305	12 pin	Morsettiera	Barrette de connection	Klemmenleiste	Terminal board
56	E10930	TD2STCSF	Trasformatore alta tensione	Transformateur H.T.	Hochspannungstrafo	H.T. Transformer
57	E40124	TGRD91 - 120V	Apparecchiatura controllo fiamma	Disp. Contrôle flamme	Flammenüberwachung	Flame control box
58	G06073	-	Piastra supporto	Plaque support	Montageplatte	Support plate
59	E10102-P	I - 0 - II	Interruttore bipolare	Interrupteur	zweipoliger Schalter	Switch
60	E20640	3P+T	Connettore presa termostato	Fiche thermostat	Steckdose	Thermostat plug
61	E20665	-	Coperchio presa termostato	Couvercle prise thermostat	Deckel Thermostatbuchse	Thermostat plug cover
62	E30443-1	AWG 14 x 3 - USA	Cavo alimentazione elettrica	Câble d'alimentation	Stromversorgungskabel	Power cord
63	E11030	230V	Lampada	Lampe	Lampe	Lamp
64	T20356	DELAVAN 1,50 GPH 80° W	Ugello gasolio	Gicleur	Düse	Nozzle
65	G01077	-	Anello diffusore	Diffusaire annulaire	Stauscheibe	Diffuser ring
66	E10215	-	Elettrodo accensione	Éléctrode allumage	Zündelektrode	Ignition electrode
67	I31034	M14	Controdado ottone	Contre-écrou laiton	Kontermutter, Messing	Brass lock nut
68	I33005	-	Raccordo portaugello	Support gicleur	Düsenhalter	Nozzle holder
69	G06228	-	Disco supporto bruciatore	Bride brûleur	Trägerscheibe Brenner	Burner support disc
70	G02078	L = 1000 mm	Cavo alta tensione	Conn. câble	Hochspannungskabel	H.T. Cable connect.
71	I40192	L = 250mm 1/8"F - 1/8"F	Microtubo	Microtube	Feinschlauch	Micropipe
72	E50334	BRAHMA FT13/V F L = 1m - Green	Fototransistor	Phototransistore	Fototransistor	Phototransistor
73	E50327-20	D 6	Supporto fotoresistenza	Support photorésistance	Halterung Photowiderstand	Photoresistor support
74	T20411-1	DANFOSS BFP 21R5 - 110V	Pompa gasolio	Pompe fuel	Heizölpumpe	Diesel pump
75	T20118	DANFOSS BFP11-21 - 110V	Bobina elettrovalvola	Bobine E.V.	Spule Magnetventil	Solenoid coil
76	T20117	DANFOSS BFP11-21	Corpo elettrovalvola	Corps électrovalve	Magnetventilgehäuse	Solenoid valve body
78	I20115	1/8"M - 1/8"M	Raccordo ferro	Raccord fer	Anschluss, Eisen	Iron fitting
AACO						
79	E10514	AACO K2	Giunto motore - pompa	Accouplement moteur-pompe	Motor/Pumpe-Kupplung	Motor-pump coupling
SIMEL						
79	E10698	SIMEL	Giunto motore - pompa	Accouplement moteur-pompe	Motor/Pumpe-Kupplung	Motor-pump coupling
80	T20239	1/4"FF - 220V	Filtro gasolio con preriscaldo	Filtre fuel pre-chauffage	Heizölfilter mit Vorwärmung	Diesel pre-heated filter
81	T20241	FAG	Kit guarnizioni filtro	KIT OR filtre	Satz Filterdichtungen	Filter seal kit
82	T20242	-	Cartuccia filtro	Cartouche filtre	Filtereinsatz	Filter cartridge
90	E20418	-	Protezione pulsante blocco	Protection button d'arrêt	Schutz Sperrschalter	Stop button protection
92	G06406-3001	-	Staffa supporto pressostato	Bride de fixation pressostat	Trägerbügel Druckdose	Pressure switch support bracket
93	E50440	NS2 - 100Pa	Pressostato	Pressostat	Druckdose	Pressure switch
94	I40335	Ø4x8 (L=1 m)	Tubo silicone	Tuyau en silicone	Silikonschlauch	Silicone pipe
95	I31131	M5	Portagomma ottone	Porte-tuyau laiton	Schlauchhalter Messing	Brass hose connection

PL 01/23			Da N.° serie	De No. Serie	Von Masch. Nr.	From S/N
			21307501			
POS	**P/N**	**LEGENDA**	**DESCRIZIONE**	**DESCRIPTION**	**BESCHREIBUNG**	**DESCRIPTION**
96	T20442	L = 1000 mm	Cavo elettrovalvola	Câble électrovalve	Kabel Magnetventil	Solenoid valve cable
97	I20325-1	1/8" FF - Ø4,5	Raccordo	Raccord	Fitting	Fitting
98	I31130	1/8"M	Portagomma ottone	Porte-tuyau laiton	Schlauchhalter Messing	Brass hose connection
101	C30323	Ø20 mm	Passacavo	Protection cable	Kabeldurchgang	Cable protection
102	02AC508	L = 215 mm	Tappo con indicatore di livello	Bouchon avec jauge	Stopfen mit Niveauanzeige	Cap with level control
103	M20111	Ø26 x Ø44 x 4	Rondella	Rondelle	Unterlegscheibe	Washer
104	E20965	M20	Dado per pressacavo	Ecrou pour presse étoupe	Mutter für Kabeldurchgang	Cable fastener nut
105	E20964	M20	Pressacavo	Presse étoupe	Kabeldurchgang	Cable fastener
106	E10302	5x20 - 6,3A - T	Fusibile	Fusible	Sicherung	Fuse
108	02AC511	N. 4	Staffa sollevamento	Étrier pour soulèvement	Hubbügel	Lifting bracket
109	P20339-9005	-	Paraurti	Pare-chocs	Stoßstange	Bumper
110	G06579-9005	-	Staffa supporto carrozzeria	Étrier support carrosserie	Trägerbügel Karosserie	Chassis support bracket
111	G06580-9005	-	Pannello	Panneau	Verkleidungsplatte	Panel